Panamorph®
We bring cinema home

XM2 / XMU / XMU-S

LENS ATTACHMENT KIT INSTALLATION GUIDE

for Paladin and Phoenix lenses

The **XM2** plate system attaches directly to most Epson, JVC and Sony home theater projectors regardless of ceiling mount and is **made for a fixed Panamorph lens**. It is the most simple attachment solution to install and use.	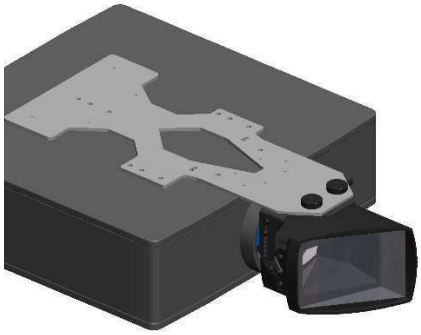
The **XMU** plate system integrates with any projector mounted with the *Chief RPA* ceiling mount system (not included) and can be used with **either a fixed or moveable Panamorph lens** (using the ATH3 transport). The XMU fits between the Chief RPA mounting head and the Chief RPA Adapter for a particular projector.	
The **XMU-S** plate system uses the *Chief RPA* ceiling mount system (not included) to mount **either a fixed or moveable lens** (using the ATH3 transport) <u>separately</u> from the projector. This is the “catch all” solution for large or heavy projection systems where using the *Chief RPA* mounting system for the projector is not practical. The XMU-S can be made from the XMU kit by cutting the steel XMU plate along a straight line.	

INSTALLING THE XM2 ATTACHMENT KIT

The XM2 attachment kit easily attaches Panamorph lenses to the projector models shown below and is also compatible with ceiling mounts used after the XM2 is installed. Epson and JVC projectors include Panamorph mounting holes and Sony projectors use the ceiling mounting holes themselves to either attach the XM2 directly or to sandwich the XM2 plate between the projector and ceiling mount. If your projector model is not shown please contact cs@panamorph.com. All international models are not shown.

EPSON EXCEED YOUR VISION	5020UB, 5030UB, 5040UB (no anamorphic modes for 50X0 series), 6020UB, 6030UB, 6040UB, LS10000, LS10500
JVC	JVC Reference Series and JVC Procision All models since 2012 including DLA-RS4500
SONY	VPL- HW40ES, VW50ES, HW55ES, HW65ES VPL- VW300ES, VW350ES, VW365ES, VW500ES, VW520ES, VW600ES,VW665ES, VW675ES, VW1000ES, VW1100ES (anamorphic modes only for HD inputs on these 4K models).

CONTENTS (in packaging outside the lens box)

(1) XM2 Plate with these instructions
(1) Lens Bracket

(2) Screw, Bracket Attachment	¼”-20 x 3/4”, black
(2) Screw, Bracket Attachment (long)	¼”-20 x 1 5/8”, black
(2) Screw, Bracket Attachment (X long)	¼”-20 x 2 3/4”, black
(2) Screw, Epson/JVC Plate Attachment	M4x18mm, silver
(2) Screw, Epson 6040 Plate Attachment	M4x25mm, silver
(3) Screw, Sony Plate Attachment	M5x30mm, silver
(2) Screw, Stabilizer	#6-32, 1” black plastic
(4) Screw, Lens Bracket	#8-32 x ¼”, black
(2) Spacer, 1” Bracket Attachment	¾”D x 1” long, black
(2) Spacer, 2” Bracket Attachment	¾”D x 2” long, black
(2) Spacer, Epson	½” OD, 3/16” long, black
(3) Spacer, Sony/Epson	½” OD, 3/8” long, black
(2) Thumb Knob, Bracket Attachment	
(1) Hex Key, Bracket Attachment	black
(1) Hex Key, Lens Bracket	gold

ATTACHING THE XM2 PLATE

1. Lay the XM2 Plate over the inverted projector to identify the mounting holes according to the designations in the following diagram. Note that some holes in the plate for older projector models may not be designated.

E1, E2	Epson projectors (E2 for 6040)
J	JVC projectors (RS4500 toward front)
S1	Sony VPL- HW40ES, HW50ES, HW55ES, HW65ES (choose plate side to center lens)
S2	Sony 4K projectors other than VW1000ES, VW1100ES
S3	Sony VPL- VW1000ES, VW1100ES

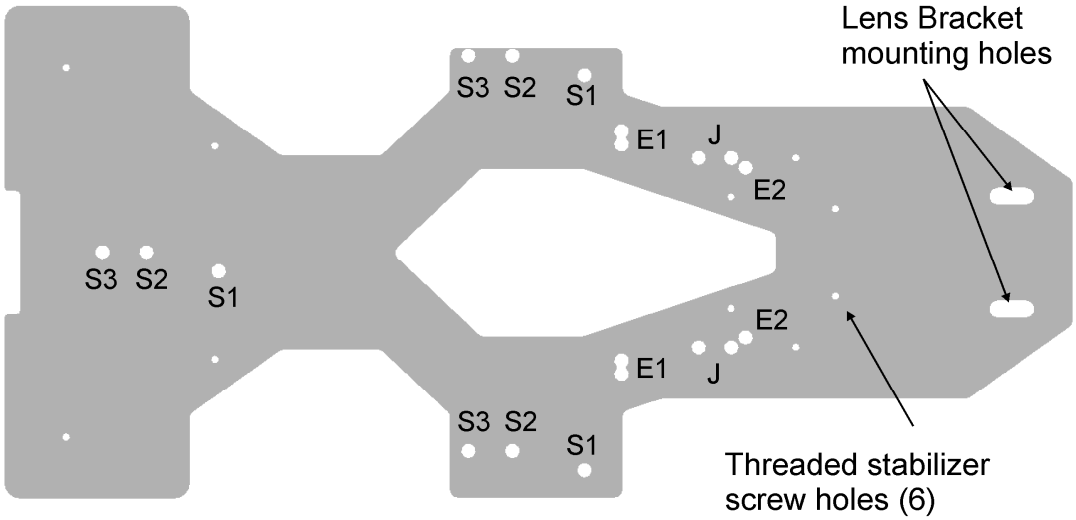

2. Set the XM2 Plate aside. For Sony projectors place the three 3/8” long spacers over the ceiling mounting holes. For Epson projectors place two 3/16” long spacers over the Panamorph mounting holes. For the Epson 6040, stack two 3/8” long spacers over the two 3/16” spacers. No spacers are required for JVC.

3. Replace the XM2 Plate over the inverted projector and align with the mounting holes without disturbing the spacers. If you are using a ceiling mount with a Sony projector, place the ceiling mount adapter over the XM2 Plate and again align with the projector mounting holes.

4. Insert and tighten the appropriate Plate Attachment Screws through the XM2 Plate and into the projector. **CAUTION: IF THE PLATE ATTACHMENT SCREWS DO NOT FULLY THREAD INTO THE PROJECTOR DO NOT FORCE THEM.** In this case you may need to either use shorter screws or add washers.

5. For ceiling mount installations, insert the two plastic stabilizer screws through the XM2 Plate as forward as possible but so that they still can make contact with the projector. Only tighten until they make contact (and no farther). Return to the lens Installation Guide section titled “BEFORE LENS INSTALLATION”.

INSTALLING THE XMU ATTACHMENT KIT

The XMU attachment kit is designed to position the Paladin or Phoenix lens in front of the primary lens of most projectors mounted with the Chief RPA ceiling mount system including Chief's universal or SLB projector adapter (Chief products not included) and **where the projector lens center is no greater than 4" (100m) to the left or right of the center of the ceiling mount pole**. If you have not yet purchased a ceiling mount for your projector, the Chief RPA with dedicated SLB adapter for your projector is generally the easiest to work with since it requires the least adjustments while installing the XMU Attachment Kit. The XMU kit is also designed to support an automated transport.

Please note that if you are using the universal Chief RPA projector adapter you should take care to set up the arms per the manufacturer's instructions so that the mounting pole is at or just a little in front of (ie toward the screen) the center of gravity of the projector for best balance.

CONTENTS (in packaging outside the lens box)

(1) XMU Plate with these instructions
(1) Lens bracket

(2) Screw, Bracket Attachment	¼"-20 x 3/4", black
(2) Screw, Bracket Attachment (long)	¼"-20 x 1 5/8", black
(2) Screw, Bracket Attachment (X long)	¼"-20 x 2 3/4", black
(2) Screw, Bracket Attachment (XX long)	¼"-20 x 4", black
(2) Spacer, Bracket Attachment (1")	¾"D x 1" long, black
(2) Spacer, Bracket Attachment (2")	¾"D x 2" long, black
(1) Hex Key, Bracket Attachment	black

(4) Screw, Lens Bracket	#8-32 x ¼", black
(1) Hex Key, Lens Bracket	gold
(4) Screw, SLB Extension	#10-24 x 1 ½" long, silver
(4) Spacer, SLB	½" OD, 3/8" long, black
(2) Screw, Stabilizer	¼"-20 x 1 ½" long, black
(4) Lock Washer, XMU-S	#10, black
(4) Screw, XMU-S Chief RPA	#10-24 x ¾" long, black
(2) Thumb Knob, Bracket Attachment	

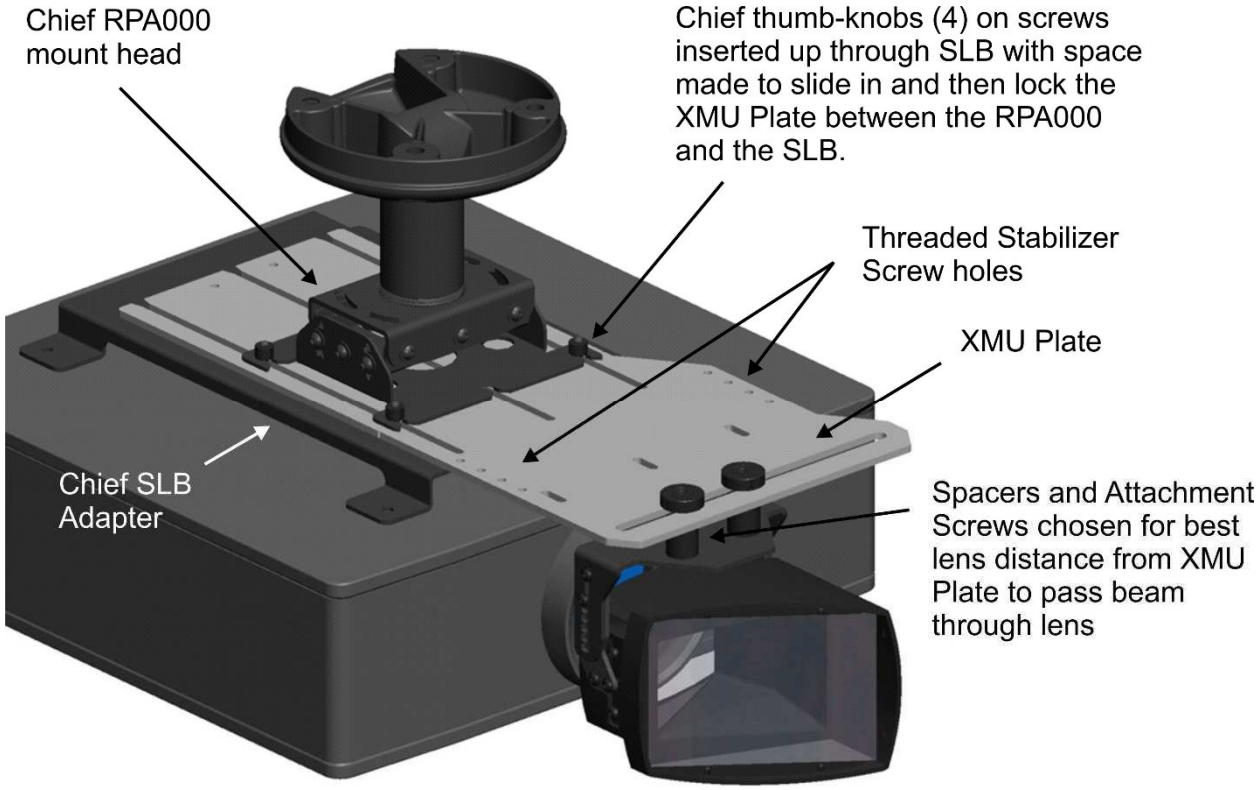

ATTACHING THE XMU PLATE TO THE CHIEF RPA CEILING MOUNT

1. The Chief RPA ceiling mount may include either the universal Chief spider arm adapter (RPA-U) or the projector-specific Chief SLB projector adapter (example shown). In most cases the XMU plate can be installed directly to a projector that has already been ceiling-mounted. However, **if you use an SLB adapter that has edges which are folded up** then a) remove the projector from the Chief RPA000 mount head, b) remove the SLB adapter, c) replace the four screws in the SLB adapter with the longer #10-24 x 1 1/2" SLB Extension screws provided in the XMU kit, d) place a Chief SLB Spacer (included) over each screw, then e) remount the projector to the RPA000 mount head per the Chief instructions, leaving the four Chief thumb-knobs somewhat loose but without risk to you or the equipment.

2. Loosen the four Chief thumb-knobs to provide a gap below the RPA000 mount head just large enough to insert the XMU Plate. **Be careful to leave enough screw thread visible above the thumb-knobs to ensure that there is no risk of the projector assembly falling.**

3. Determine which side of the XMU Plate will orient the horizontal slot so that the Lens Bracket (when attached) will be positioned in front of the projector lens (if using an automated transport please see those instructions for guidance). Note that if the projector lens is horizontally centered on the Chief RPA mount then it will not matter which side of the XMU Plate is used. Now slide the XMU Plate from front to back into the gap created in Step 2 just under the Chief RPA head so that the exposed threads of the Chief RPA screws line up with the slots in the XMU Plate. Continue sliding the XMU Plate back about ½" (12mm) beyond the rear set of three head screws. Tighten the four thumb-knobs to secure the XMU Plate for now knowing that you will be loosening them again during future steps.

4. Return to the Lens Installation Instructions section titled "BEFORE LENS INSTALLATION".

INSTALLING THE XMU-S ATTACHMENT KIT

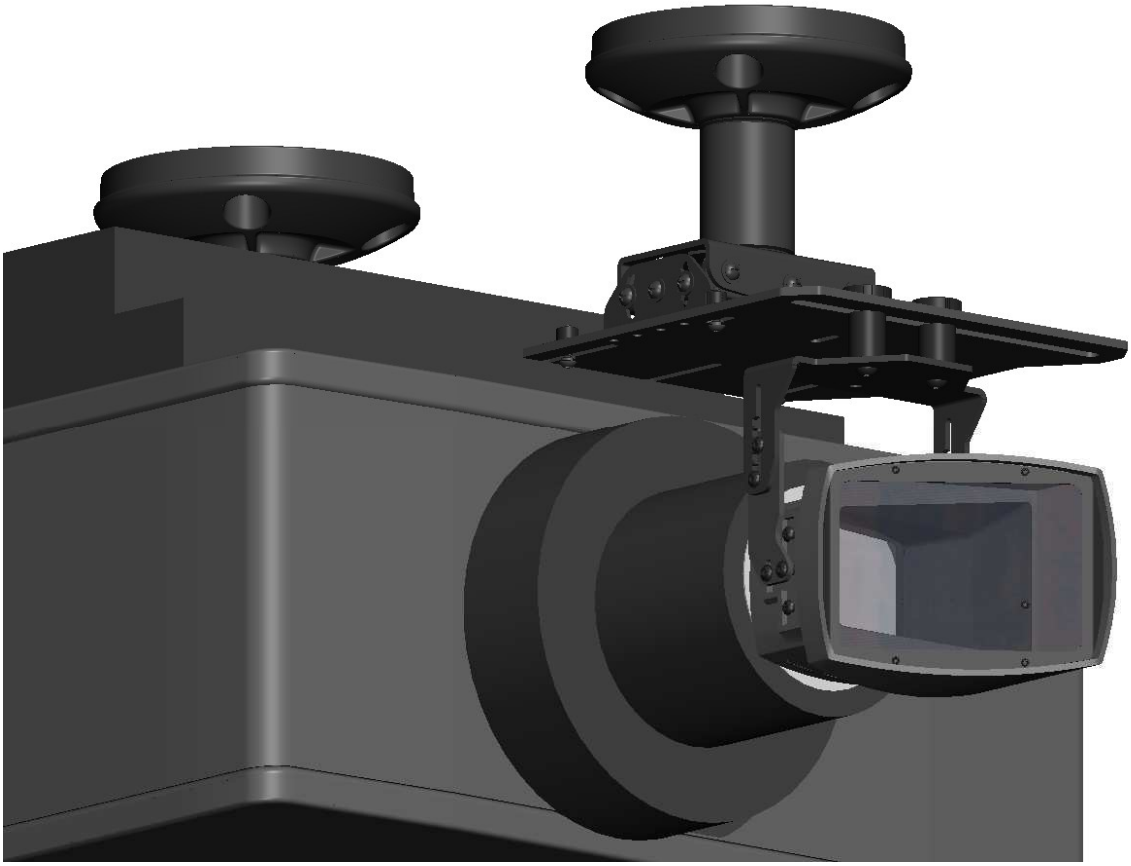

The XMU-S (Short) Plate is a trimmed version of the XMU Plate that is installed above the projector lens with its own Chief RPA ceiling mount (not included). This may be desirable in situations where using the standard XMU attachment kit is not practical, such as with very large projectors or projectors already installed and too much trouble to retrofit with the XM2 or XMU. You can order the XMU-S Kit or you can order the XMU Kit and have a machine shop cut and dress the XMU plate to create the XMU-S plate (the cut line is indicated by notches on either side of the XMU plate). All other components in the two kits are identical. NOTE: The RPA000 and other components are NOT included with the XMU/XMU-S attachment kit and must be purchased separately.

CONTENTS (in packaging outside the lens box)

(1) XMU-S plate with these instructions.
(1) Same components as XMU Kit

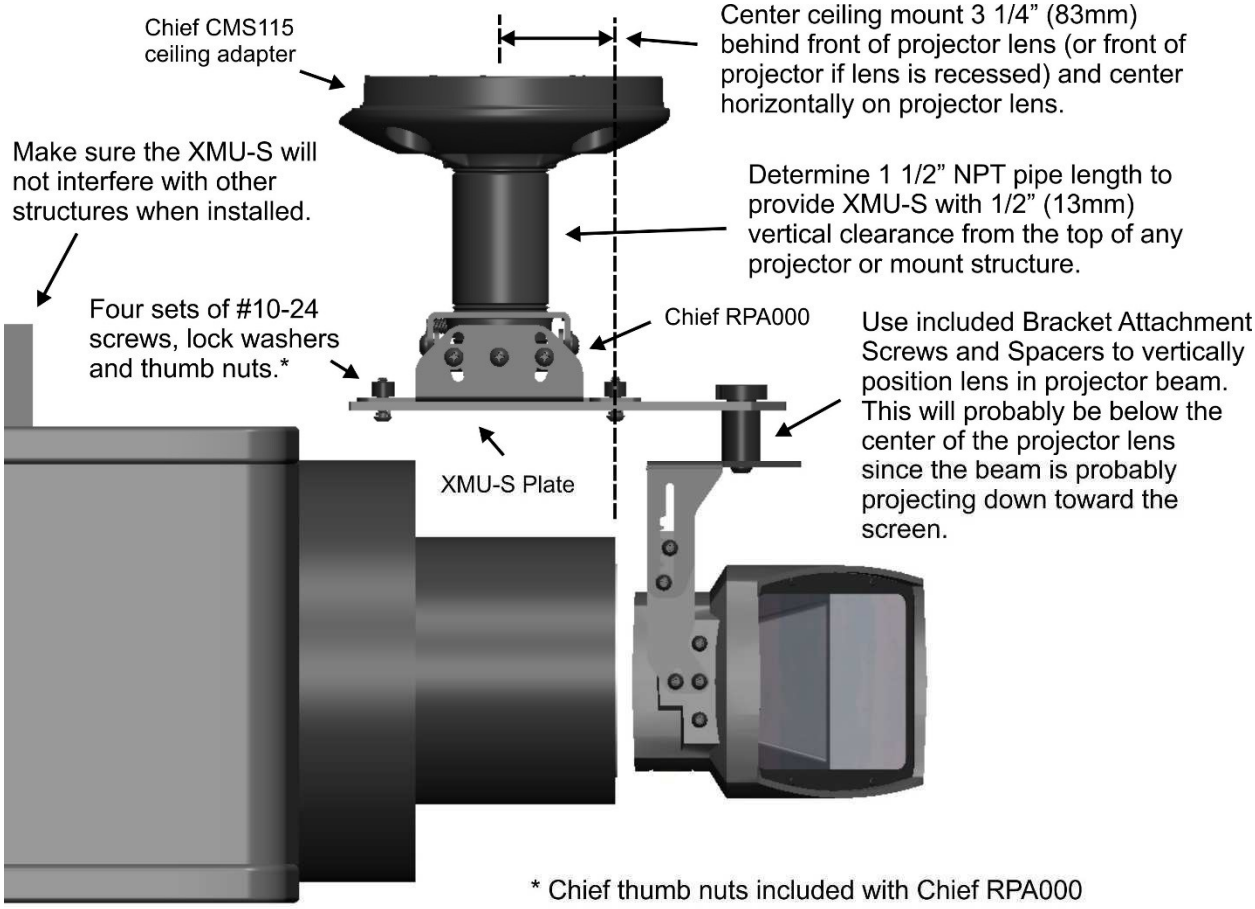

CEILING MOUNTING THE XMU-S

1. Use a plum bob to make a mark on the ceiling directly above the horizontal center of the front of the projector lens. If the projector lens is recessed then make the ceiling mark directly above the front of the housing and horizontally centered on the lens opening.

2. Make a second mark on the ceiling 3 ¼" (83mm) behind the first ceiling mark (ie toward the back of the ceiling). NOTE: If you want to mount the XMU-S Plate facing backwards then make this second mark in front of the first ceiling mark instead.

3. Obtain a threaded 1 ½" NPT pipe with a custom length and attach to a ceiling flange (such as Chief CMS115) and the RPA000 so the bottom of XMU-S when mounted will have approximately ½" (13mm) clearance to the projector or any other structure.

4. Decide whether you want to attach the XMU-S Plate with the long horizontal slot extending either right or left from center of the projector lens by flipping the plate.

For fixed Panamorph lens installations this direction does not matter and is only chosen for best appearance. However, if you are using the motorized transport then please consult those instructions for further guidance.

5. Attach the XMU-S Plate to the RPA000 by using the four #10-24, ¾" button head cap screws, four lock washers included with the attachment kit and four knurled thumb nuts included with the RPA000. Do not fully tighten at this time.

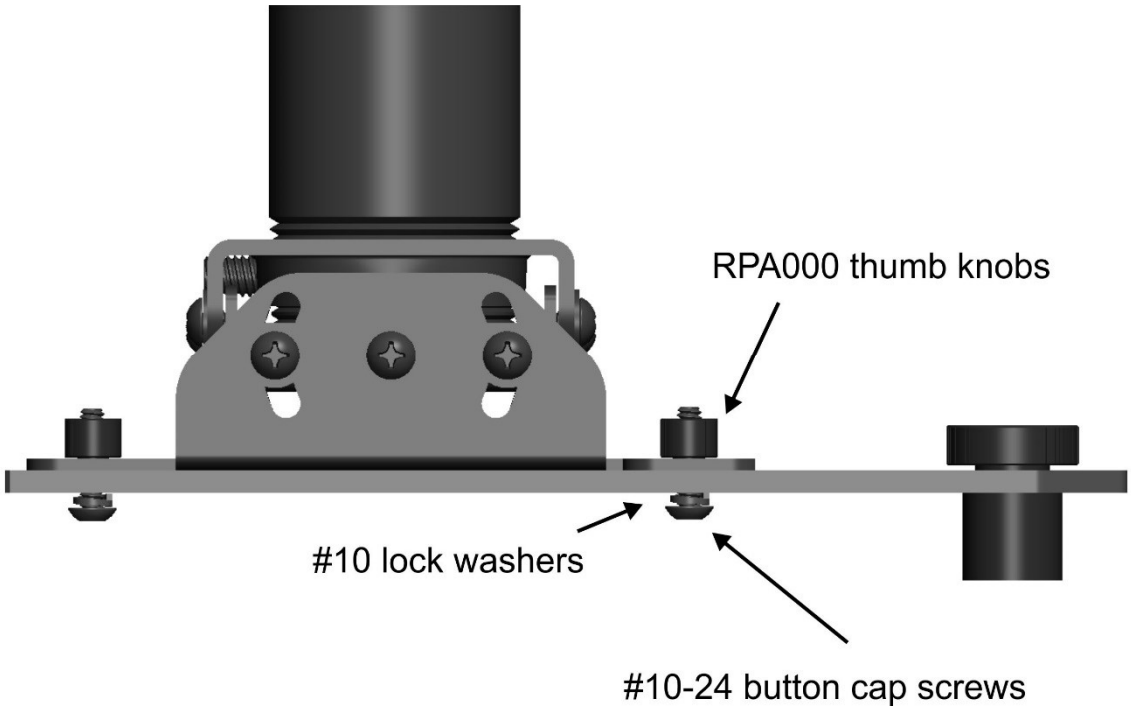

6. Carefully attach the XMU-S assembly to the ceiling so that it is centered on the second ceiling mark and so that the horizontal slot of the XMU-S is in front of the projector lens. Refer to any instructions from the ceiling mount manufacturer for proper installation. Insure that the assembly is rigidly installed.

5. Return to the Lens Installation Guide section titled "BEFORE LENS INSTALLATION".